DIECI

MINI AGRI

26.6

dieci.com

PERFORMANCE

Vehicle model	Mini Agri 26.6
Maximum capacity	2600 kg (5732 lb)
Maximum lifting height	5.73 m (18.8 ft)
Maximum horizontal extension	3.2 m (10.5 ft)
Fork swiveling angle	129°
Pull-out force	5510 daN (12387 lbf)
Towing force	4400 daN (9892 lbf)
Unladen weight	5100 kg (11244 lb)
Maximum climb angle	40 %
Max speed (referred to wheels with maximum permitted diameter)	30 km/h (18.6 mph)

BOOM

Vehicle model	Mini Agri 26.6
Getting off the basket	4,6 s
Lifting	7,95 s
Extension	6,73 s
Retraction	3.7 s
Forward swiveling	3,82 s
Reverse swiveling	3,75 s

ENGINE

Vehicle model	Mini Agri 26.6
Brand	Kubota
Nominal power	55 kW (74 HP)
@rpm	2600 rpm
Operation	4-stroke
Injection	Electronic, Common Rail
Number and arrangement of cylinders	4, Vertical in line
Displacement	3331 cm^3 (203 in^3)
Consumption	231 g/kWh (380.00 lb/Hp h)
@rpm	2600 rpm
Emission standards	Stage V/Tier 4f
Exhaust gas treatment	Catalyst + Particulate filter (DOC+DPF)
Cooling system	Liquid
Intake	Turbo compressor
Air filter	Air pre-heating and air pre-filtering with dust separator

TRANSMISSION

Vehicle model	Mini Agri 26.6
Transmission type	Single speed Hydrostatic transmission with variable displacement pump
Hydraulic motor	Hydrostatic with continuous automatic adjustment
Reversal	Electro-Hydraulic
Inching	With hydraulic pedal for controlled forward movement

DIFFERENTIAL AXLES

Vehicle model	Mini Agri 26.6
Type of axles	2 steering, with 4 epicycloidal reduction gears
Type of steering	4 wheels / transversal / 2 wheels
Front axle	Rigid
Rear axle	Swinging
Service braking	Oil bath on front axle
Parking braking	Negative actuation with electrical control

HYDRAULIC SYSTEM

Vehicle model	Mini Agri 26.6
Hydraulic pump type	Gear pump for power steering and movements
Hydraulic pump capacity	80 l/min (21.1 gal/min)
Max. operating pressure	23 MPa (3336 psi)
Distributor control	4 in 1 proportional electrical Joystick with FNR
Distributor type	Full electric proportional hydraulic

FILLING

Vehicle model	Mini Agri 26.6
Hydraulic system (total)	85 l (22.45 gal)
Diesel tank	75 l (19.81 gal)

TYRES

Vehicle model	Mini Agri 26.6
Standard tires	12-16.5

DIMENSIONS

Vehicle model	Mini Agri 26.6
A	250 mm (9,8 in)
B	985 mm (38.8 in)
C	2350 mm (92.5 in)
D	765 mm (30.1 in)
F	3585 mm (141.1 in)
G	4100 mm (161.4 in)
H	1955 mm (77.0 in)
I	860 mm (33,9 in)
L	1510 mm (59,4 in)
M	1860 mm (73.2 in)
P	1300 mm (51,2 in)
Q	3380 mm (133,1 in)
S	1460 mm (57.5 in)
T	100 mm (3.9 in)

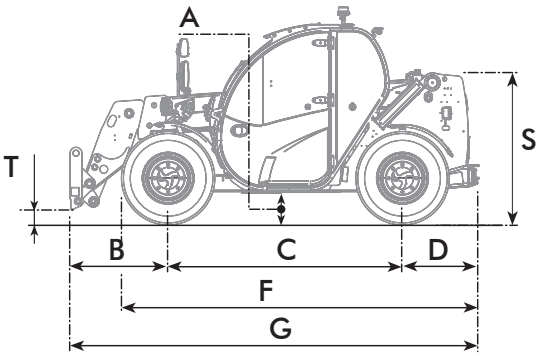

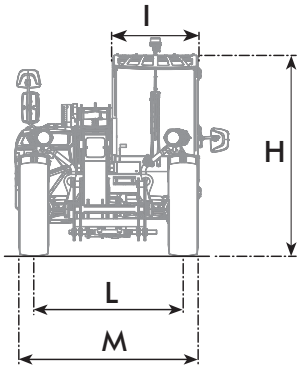

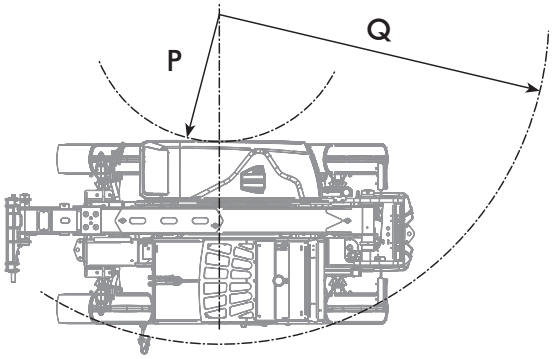

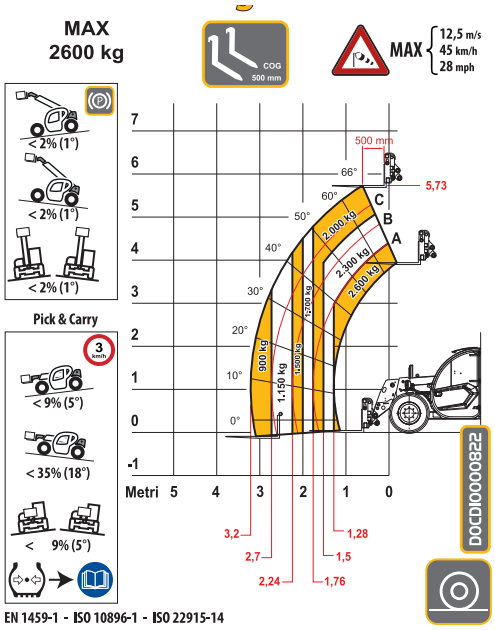
MAX
2600 kg
COG
500 mm
MAX
12,5 m/s
45 km/h
28 mph
< 2% (1°)
< 2% (1°)
< 2% (1°)
Pick & Carry
3 km/h
< 9% (5°)
< 35% (18°)
< 9% (5°)
7
6
5
4
3
2
1
0
-1
Metri 5 4 3 2 1 0
0°
10°
20°
30°
40°
50°
60°
66°
500 mm
5,73
C
B
A
2.000 kg
2.300 kg
2.600 kg
1.700 kg
1.500 kg
1.150 kg
900 kg
3,2
2,7
2,24
1,28
1,5
1,76
DOCDI0000822
EN 1459-1 - ISO 10896-1 - ISO 22915-14

26.6